Flymo	MODEL	RL460S
	PRODUCT NO.	9644601-51

PARTS **8T**

PARTS LIST

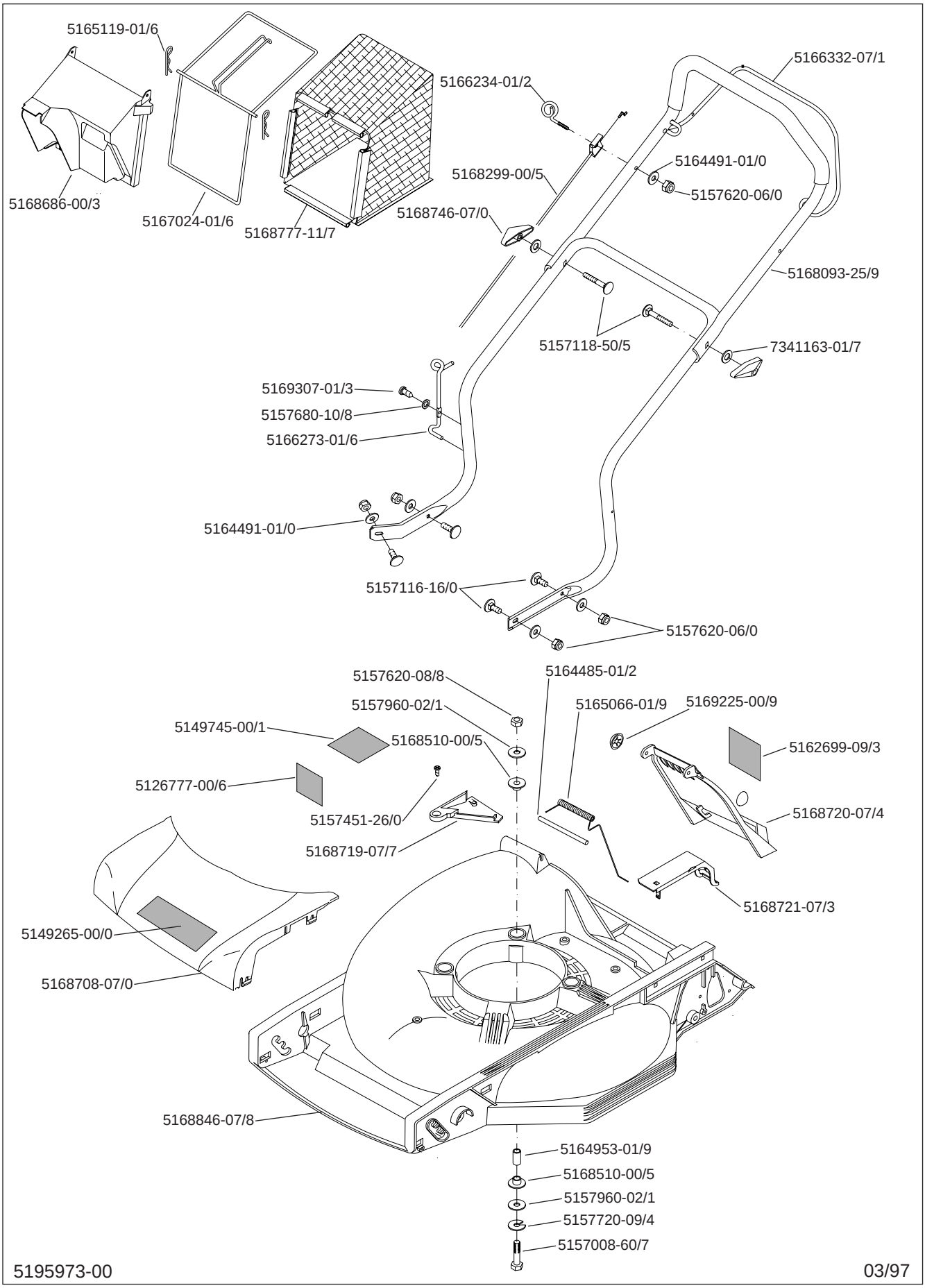

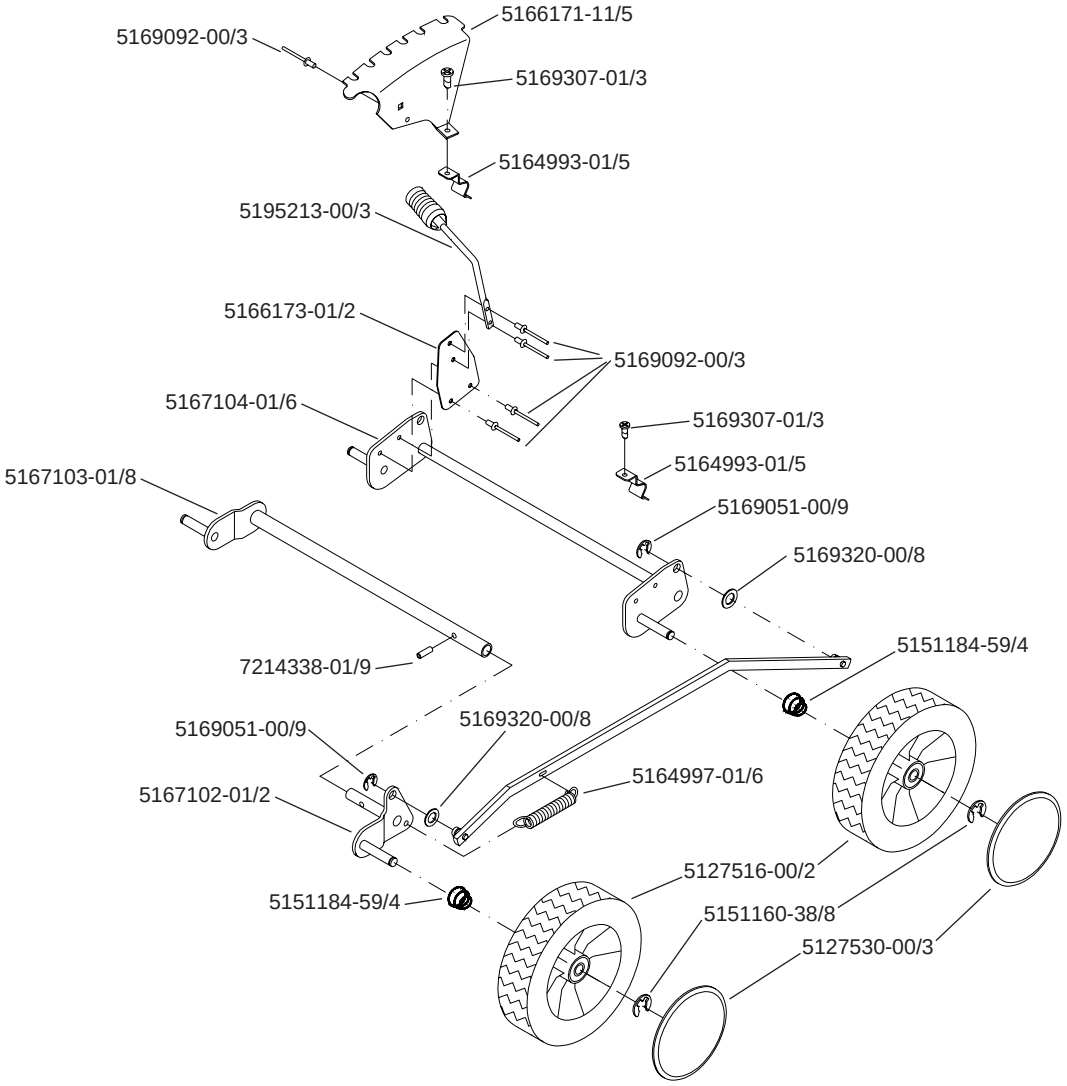
5169092-00/3
5166171-11/5
5169307-01/3
5164993-01/5
5195213-00/3
5166173-01/2
5169092-00/3
5167104-01/6
5169307-01/3
5164993-01/5
5167103-01/8
5169051-00/9
5169320-00/8
5151184-59/4
7214338-01/9
5169051-00/9
5169320-00/8
5164997-01/6
5167102-01/2
5127516-00/2
5151184-59/4
5151160-38/8
5127530-00/3

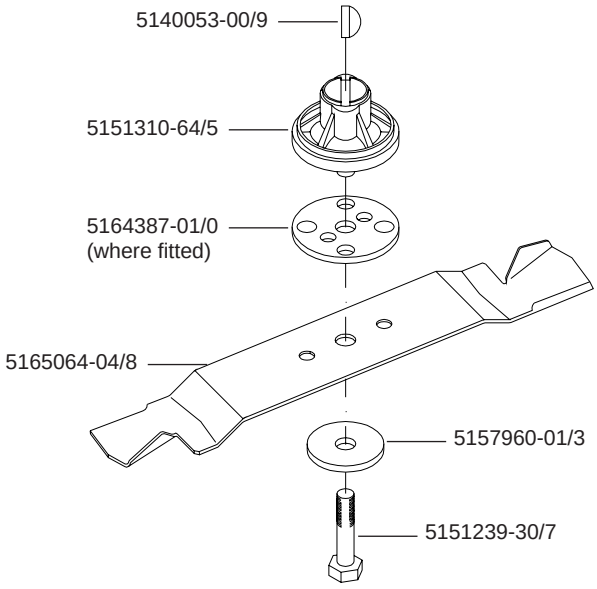
5140053-00/9
5151310-64/5
5164387-01/0
(where fitted)
5165064-04/8
5157960-01/3
5151239-30/7