McCULLOCH

SERIAL NUMBER PREFIX - 00

1	FIGURE 1		
6	228869		1
7	● 235742		1
8	235015		1
9	235016		1
10	FIGURE 2		
12	235707		1
13	95846		1
14	92879		1
15	235020		1
16	240672		1
17	229258		1
18	235551		1
19	● 235510		1
20	235028		1
21	235029		1
22	235030		1
23	235526		1
□	235031		1
○	235686		1
24	235032		1
25	235033		1
26	235480		1
○	228603		1
27	● 235372		1
28	●● 235042		1
29	● 235040		1
30	● 235043		1
31	● 235048		2
32	● 235430	M4x35	1
33	● 235431		1
34	235138		1
35	● 235516		2
36	● 235517		2
37	● 235518		2
38	228597		1
39	229250	M5x8	2
40	229075		1
42	235163		1
43	235552		1
44	● 235511		1
45	228968		1
46	● 228975	M5x55	2
47	228416		1
48	● 235238		1
49	235073		1
50	229740		1
51	235653		1
52	235115		1
53	240669		1
54	246785		1
55	● 235519		1
56	● 235521		1
57	● 235104		1
58	240673		4
59	240675		4
60	235802	M5x14	8
61	235574		1
62	235367		1
63	235184		1
64	229082		1
65	235643		1
66	240592		2
67	235812		1
68	228139		1
69	235287		1
70	228138		1
71	235177		1
72	235183		1
73	235522		1
74	235205		5
75	235230		1
76	240674		1
77	228934		1
○ 78	235696		1
79	236997		7
80	229217		1
81	228150		4
83	235216		6
84	235217		2
85	235218		1
86	235806	M5x20	4
○ 87	228600		1
88	235248		5
89	229137		1
90	228955		1
91	235120		1
92	235281		1
93	229260		1
94	246912		1
95	● 235190		1
96	● 235900		1
97	● 228872		1
98	● 228935		2
99	● 228122		1
100	● 235222		1
101	● 94006		1
102	● 235075		1
103	● 235221		1
104	235716		1
105	● 235741		1
106	● 229809		1
107	● 235675		1
108	● 227260		1
109	235729		1
110	235670		1
111	235672		1
113	235899		1
114	235229		1
115	229237		1
○ 116	235885		1
117	240460		2
*123	235234		1
124	237055		1
125	235226		1
126	235225		2
127	228853		1
128	228943		2
129	102164		1
130	229082		1
○ 131	228602		2
134	229087		2
135	229018		1
136	246660		1
137	● 240164		1
138	● 225062		1
139	● 228855		1
140	● 228854		1
141	235033		1

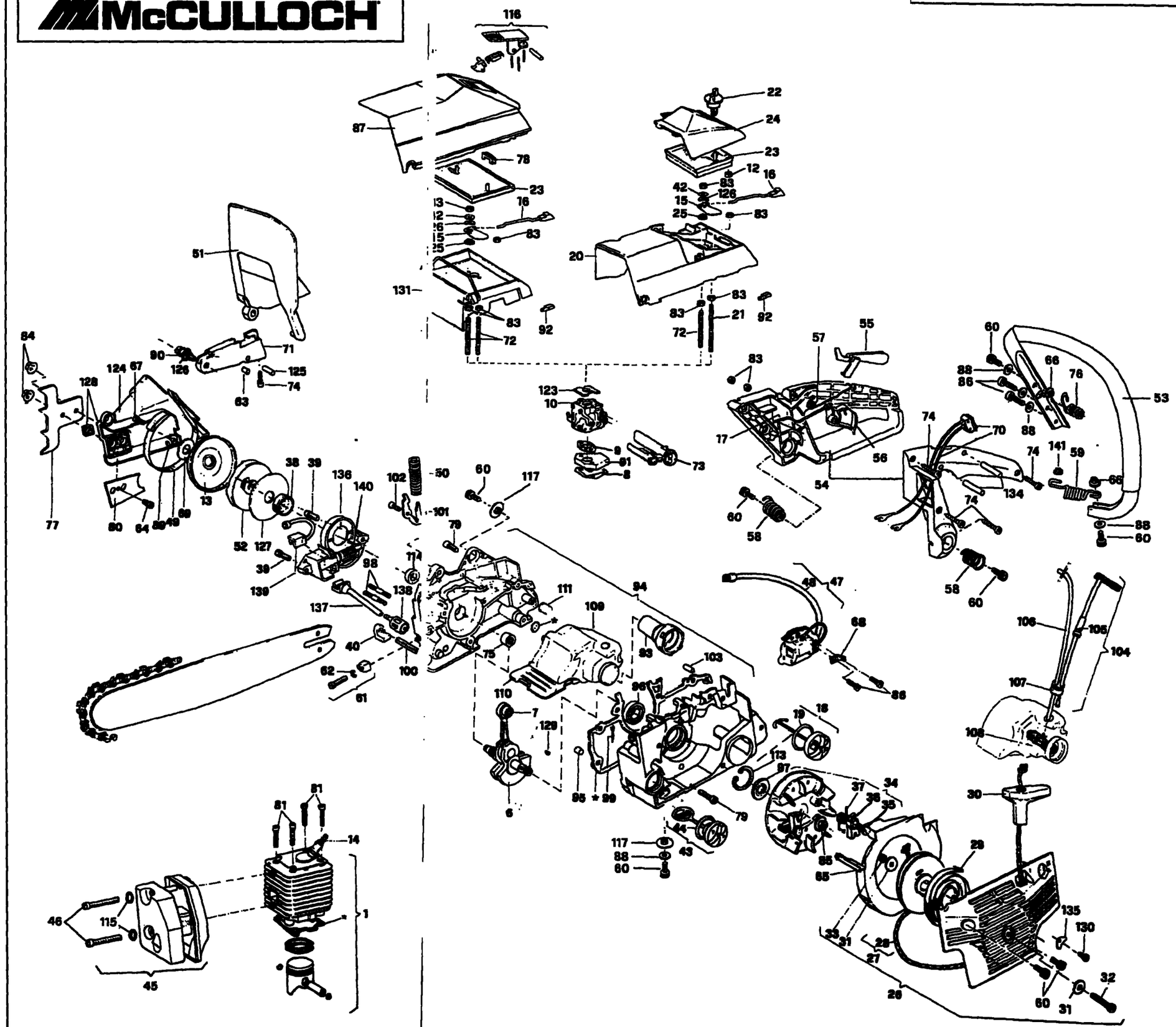

Kit guarnizioni P/N 246943 (*-8-9-19-44-122)

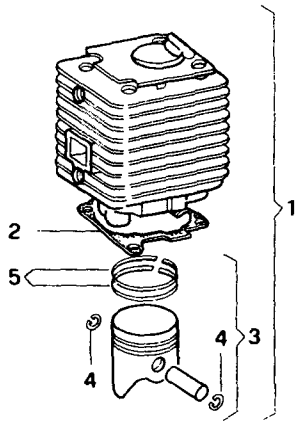

PM 484 California	1	235798	1
	2	• 235135	1
	3	• 235797	1
	4	•• 235008	2
	5	•• 235678	2
PM 374	1	235477	1
	2	• 235135	1
	3	• 235376	1
	4	•• 235008	2
	5	•• 240002	2

FIGURE 1

WALBRO

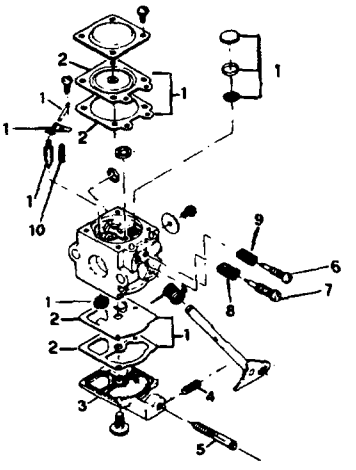

Walbro WT 113		**229439**	carbur.
PM 374	1	• 229198	1
	2	•• 229191	1
	3	• 226037	1
	4	• 226038	1
	5	• 226039	1
	6	• 229600	1
	7	• 246953	1
	8	• 229927	1
	9	• 229601	1
	10	• 246952	1
Walbro WT 55		**228527**	carbur.
PM 484 California	1	• 229198	1
	2	•• 229191	1
	3	• 226037	1
	4	• 226038	1
	5	• 226039	1
	6	• 229600	1
	7	• 229599	1
	8	• 229927	1
	9	• 229601	1
	10	• 246952	1

FIGURE 2

ZAMA

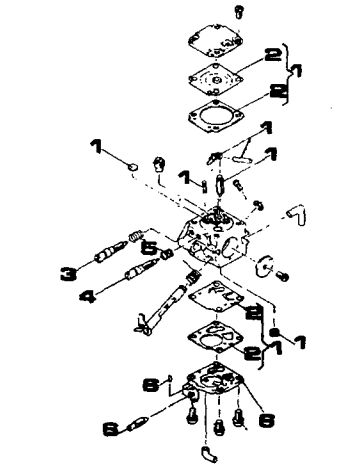

Zama C1Q M24		**229738**	carbur.
PM 374	1	• 226226	1
	2	•• 226227	1
	3	• 226228	1
	4	• 226229	1
	5	• 226230	2
	6	• 226231	1
Zama C1Q M26		**229990**	carbur.
PM 484 California	1	• 226232	1
	2	•• 226227	1
	3	• 226233	1
	4	• 226234	1
	5	• 226230	2
	6	• 226231	1