CODICE	MODEL	*	**	✧	☆	⊛	⬠	✸	□	△			
S02028	4100 XAS	110007312	200054800(2)	200092100(2)	200059215(4)	180005310	—	—	—	200070915(2)			
S02047	4100 XAS	110003814	200054800(2)	200092100(2)	200059215(4)	180005310	—	—	—	200070915(2)			
S02073	4100 XAS/R	110007314	200054800(2)	200092100(2)	200059215(4)	180005310	—	—	—	200070915(2)			
S02077	4100 XAS/V	110007318	200054800(2)	200092100(2)	200059215(4)	180005310	—	—	—	200070915(2)			
S02303	4110 XAS/R	110040214	200054800(2)	200092100(2)	200059215(4)	180005310	—	—	—	200070915(2)			
S02304	4110 XAS/V	110040218	200054800(2)	200092100(2)	200059215(4)	180005310	—	—	—	200070915(2)			
S02306	4110 XSS/R	110007314	200054800(2)	200092100(2)	200059215(4)	180005310	290012801	290010701	250011000	200070915(2)			
S02307	4110 XAS	110040216	200054800(2)	200092100(2)	200059215(4)	180005310	—	—	—	200070915(2)			
S02309	4300 B35C	110053814	200054800(2)	200092100(2)	200059215(4)	180005310	—	—	—	200070915(2)			
S02310	4110 XAS	110040220	200054800(2)	200092100(2)	200059215(4)	180005310	—	—	—	200070915(2)			
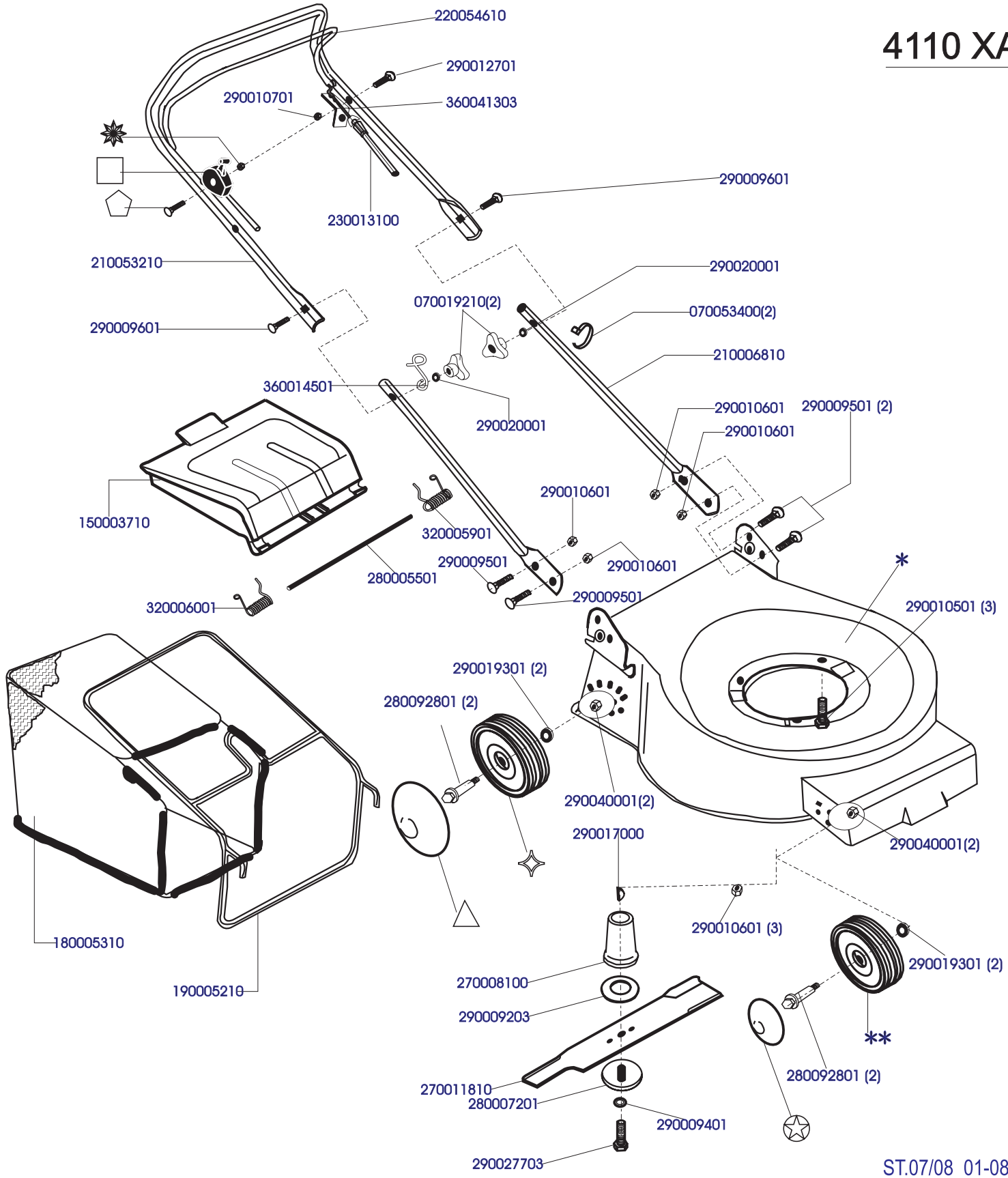
4110 XAS