CODICE	MODEL	*	**	✧	☆	□	⊛						
S02311	4300 B35	110040214	200055000(2)	200092200(2)	200059215(2)	200070915(2)	090054700(8)						
S02313	4120 XAS	110040214	200054800(2)	200092100(2)	200059215(2)	200070915(2)	————						
S02316	4120 XAS	110040214	200055000(2)	200092200(2)	200059215(2)	200070915(2)	090054700(8)						
S02318	4300 B35	110040214	200055000(2)	200092200(2)	200059215(2)	200070915(2)	090054700(8)						
S02319	4120 XAS	110040220	200054800(2)	200092100(2)	200059215(2)	200070915(2)	————						
S02321	4120 XSS	110040221	200054800(2)	200092100(2)	200059215(2)	200070915(2)	————						
S02323	4120 XSS	110040214	200054800(2)	200092100(2)	200059215(2)	200070915(2)	————						
S02324	GART 39B	110040216	200054800(2)	200092100(2)	200059216(2)	200070916(2)	————						
S02325	4120 XAS	110040218	200055000(2)	200092200(2)	200059215(2)	200070915(2)	090054700(8)						
S02326	4120 XAS	110040223	200054800(2)	200092100(2)	200059215(2)	200070915(2)	————						
S02327	4120 XSS	110040214	200055000(2)	200092200(2)	200059215(2)	200070915(2)	090054700(8)						
S02328	4300 B40	110040214	200055000(2)	200092200(2)	200059215(2)	200070915(2)	090054700(8)						
S02329	4120 XSS	110040218	200054800(2)	200092100(2)	200059215(2)	200070915(2)	————						
S02331	4120 XSS	110040218	200054800(2)	200092100(2)	200059215(2)	200070915(2)	————						
S02338	4120 XSS	110040214	200054800(2)	200092100(2)	200059215(2)	200070915(2)	————						

4120 XAS
4120 XSS

Pag 1 di 2

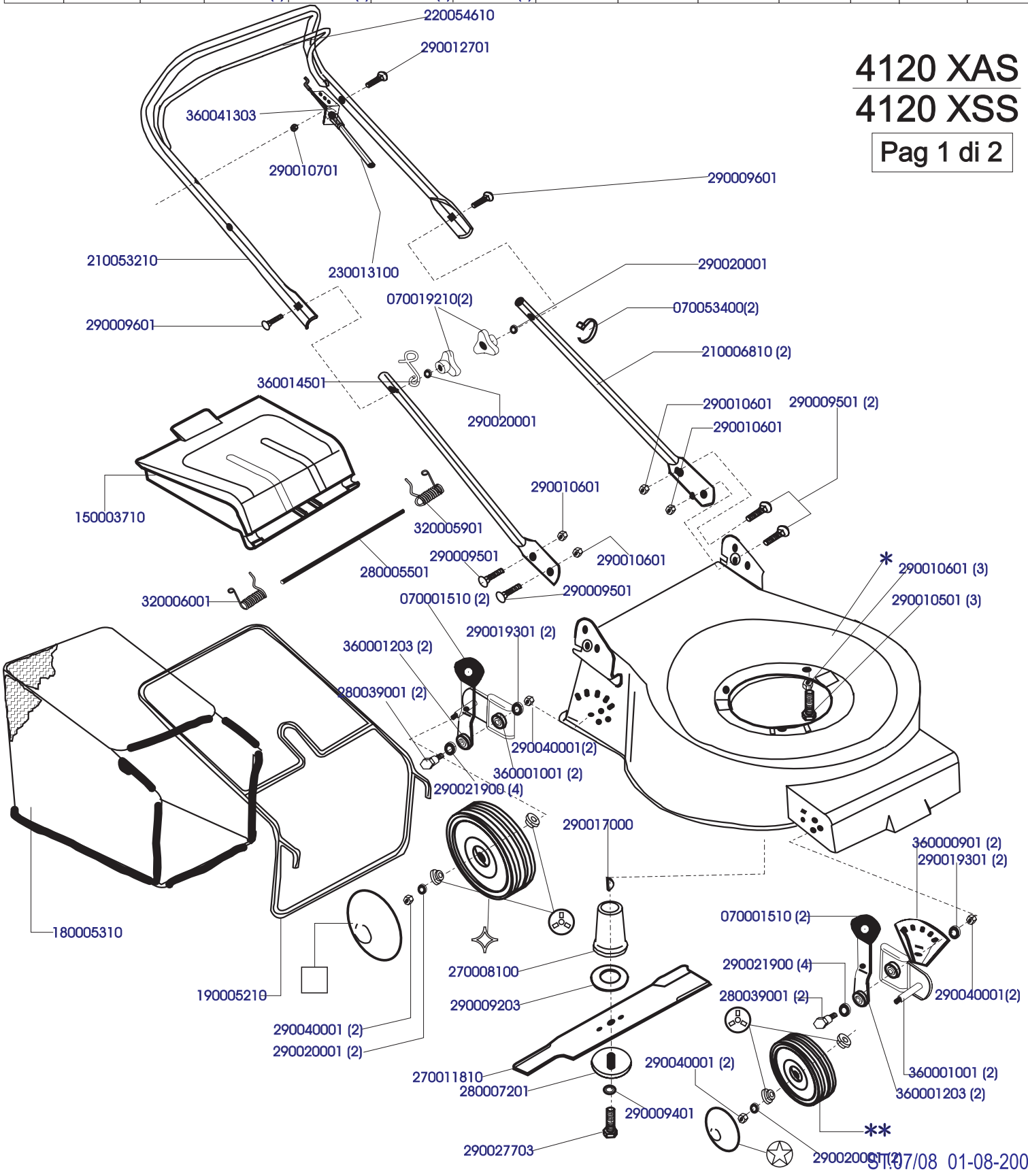

CODICE	MODEL	*	**	✧	☆	□	⊛
S02343	4120 XAS	110040216	200054800(2)	200092100(2)	200059216(2)	200070916(2)	————
S02344	4120 XSS	110040221	200054800(2)	200092100(2)	200059215(2)	200070915(2)	————
S02351	4120 XAS	110040214	200054800(2)	200092100(2)	200059215(2)	200070915(2)	————

4120 XAS
4120 XSS
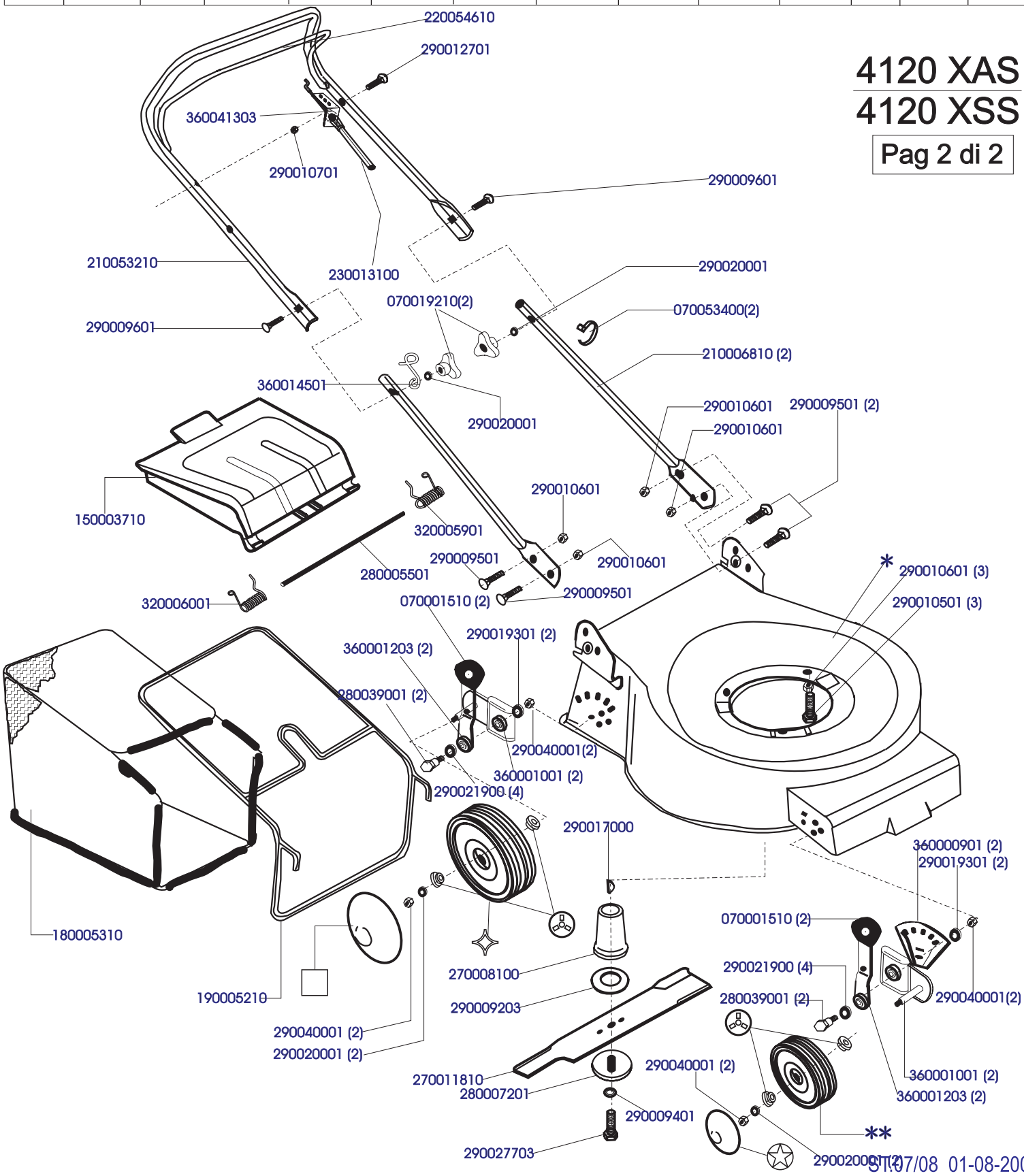
Pag 2 di 2