COD.	MOD.	*	**	✧	☆	△	⊛
S11950	440000 NRS	110201121	200200900(2)	200197800(2)	200196215(2)	200211815(2)	----------
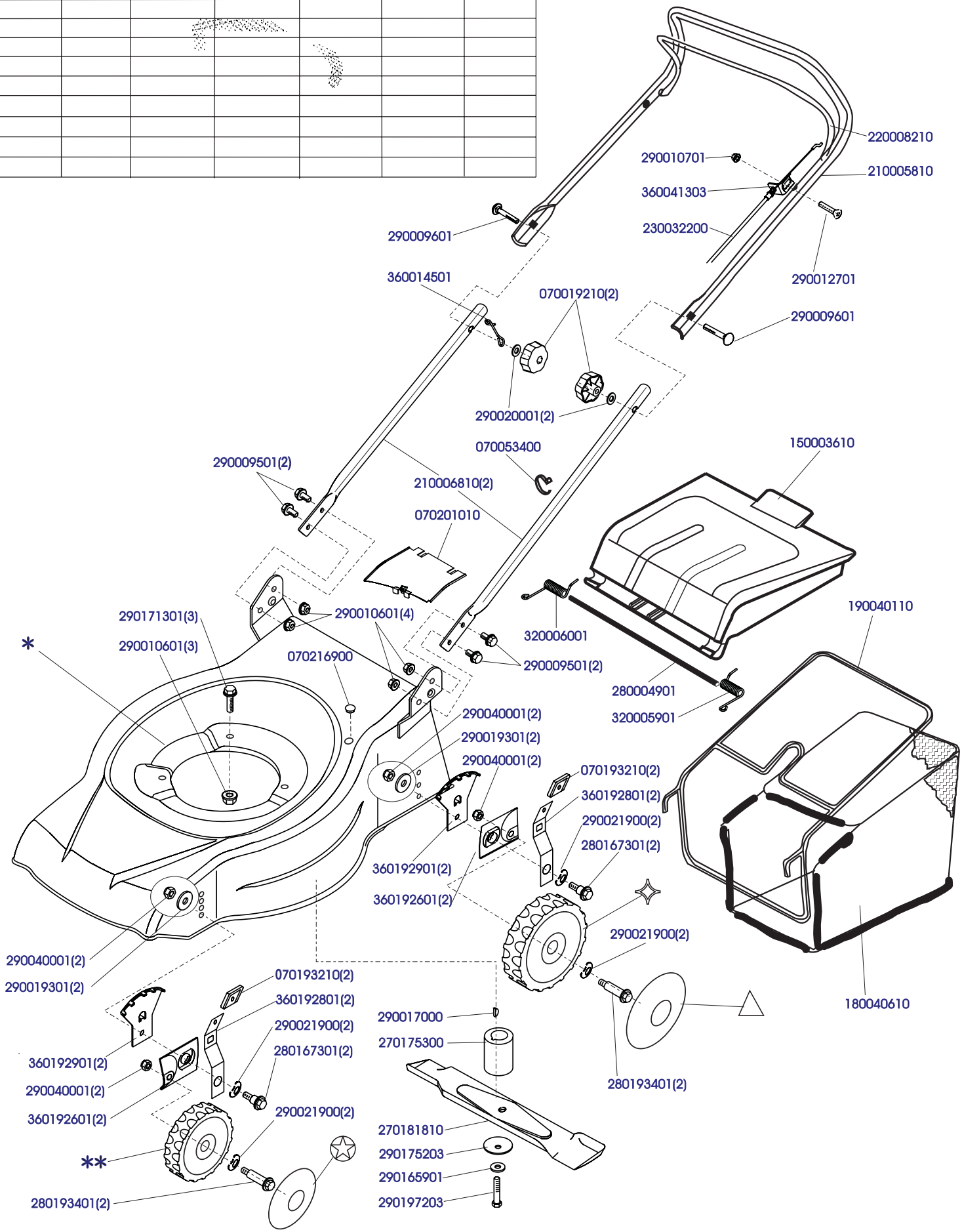
440000 NRS