COD.	MOD.	*	**	✧	☆	△	⊛					
S02063	47500 XLT/R	110081214	200092200(2)	200013600(2)	200090015(2)	200070915(2)	090054700(8)					
S02805	47500 XQT	110081213	200092200(2)	200013600(2)	200090016(2)	200070916(2)	090054700(8)					
S02806	47500 XST	110081213	200092200(2)	200013600(2)	200090016(2)	200070916(2)	090054700(8)					
S02807	47500 XST/R	110081214	200092200(2)	200013600(2)	200090015(2)	200070915(2)	090054700(8)					
S02816	47500 XQT	110081213	200092200(2)	200013600(2)	200090016(2)	200070916(2)	090054700(8)					
S02823	UGT 474	110081214	200092200(2)	200013600(2)	200090015(2)	200070915(2)	090054700(8)					
S02824	47500 XQT	110081214	200092100(2)	200013600(2)	200090015(2)	200070915(2)	090054700(4)					
S02841	UGT 474	110081214	200092200(2)	200013600(2)	200090015(2)	200070915(2)	090054700(8)					
S02843	47500 XQT	110081213	200092200(2)	200013600(2)	200090016(2)	200070916(2)	090054700(8)					
S02852	47500 XST	110081214	200092100(2)	200013600(2)	200090015(2)	200070915(2)	090054700(4)					
S02859	AGT 474	110081221	200092200(2)	200013600(2)	200090015(2)	200070915(2)	090054700(8)					
S02872	47500 XST	110081214	200092200(2)	200013600(2)	200090015(2)	200070915(2)	090054700(8)					
S02875	47500 XST	110081223	200092200(2)	200013600(2)	200090015(2)	200070915(2)	090054700(8)					
S02878	47500 XST	110081214	200092200(2)	200013600(2)	200090015(2)	200070915(2)	090054700(8)					
S02879	47500 XQT	110081214	200092200(2)	200013600(2)	200090015(2)	200070915(2)	090054700(8)					
S02885	47500 XST	110081230	200092200(2)	200013600(2)	200090015(2)	200070915(2)	090054700(8)					

47500 XST
47500 XQT

Pag 1 di 2

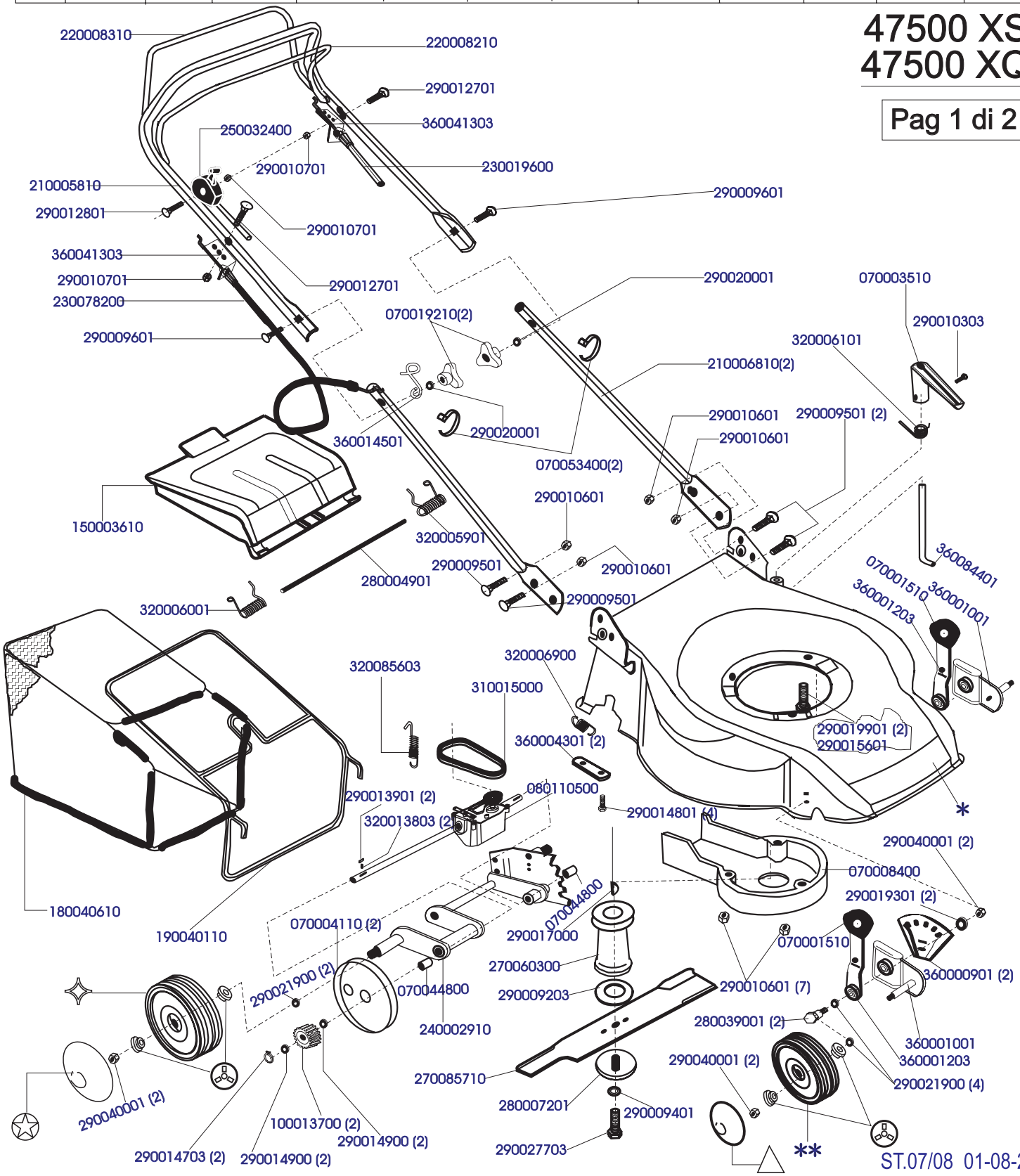

COD.	MOD.	*	**	✧	☆	△	⊛					
S02889	47500 XST	110081216	200092200(2)	200013600(2)	200090015(2)	200070915(2)	090054700(8)					
S02891	47500 XQT	110081214	200092100(2)	200013600(2)	200090015(2)	200070915(2)	090054700(4)					
S02896	47500 XST	110081218	200092100(2)	200013600(2)	200090015(2)	200070915(2)	090054700(4)					

47500 XST
47500 XQT
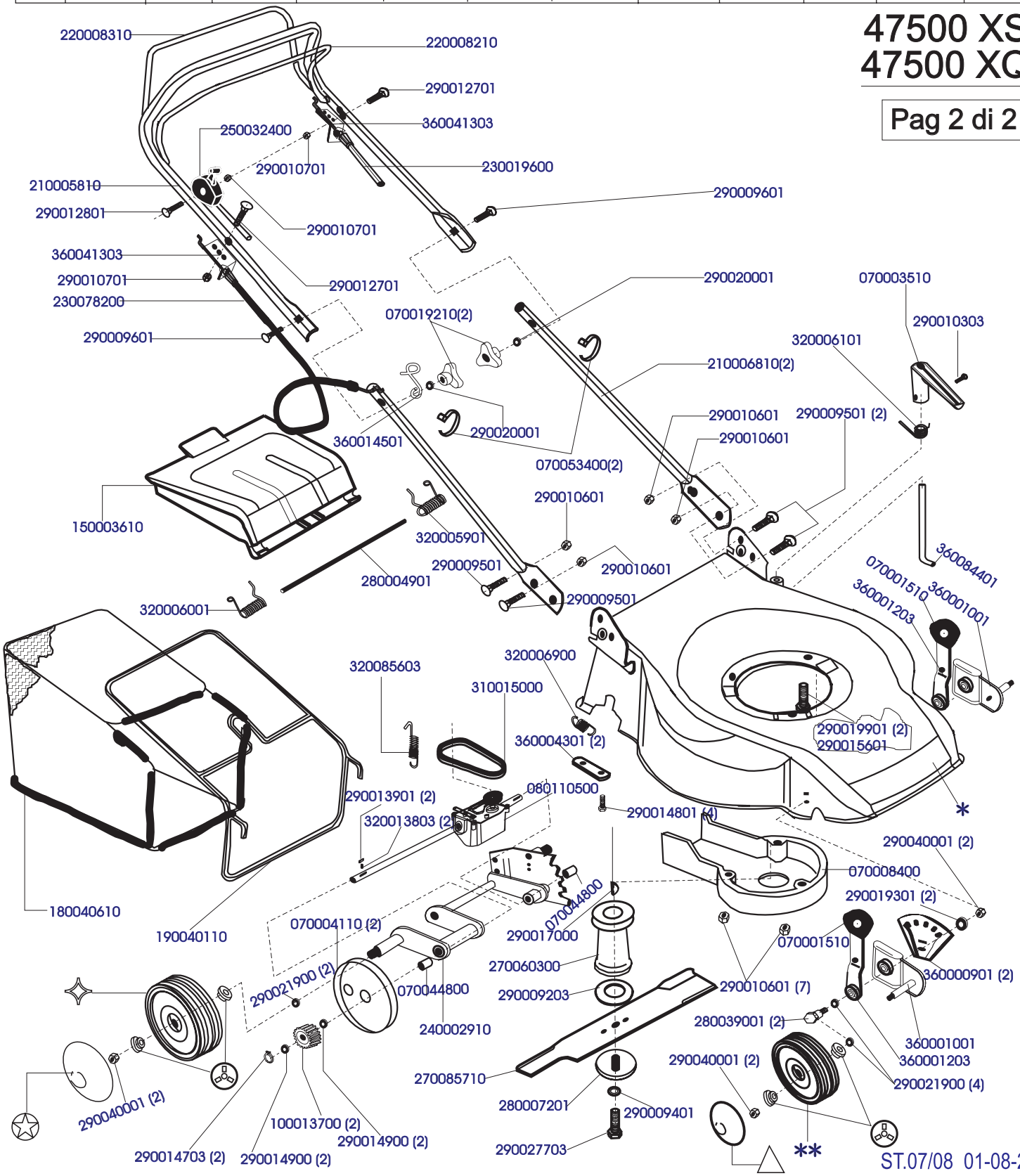
Pag 2 di 2