COD.	MOD.	*	**	✧	☆	△	⊛					
S05408	47500 XSTE	110081214	200092200(2)	200013600(2)	200090015(2)	200070915(2)	090054700(8)					
S05415	47500 XSTE	110081230	200092200(2)	200013600(2)	200090015(2)	200070915(2)	090054700(8)					
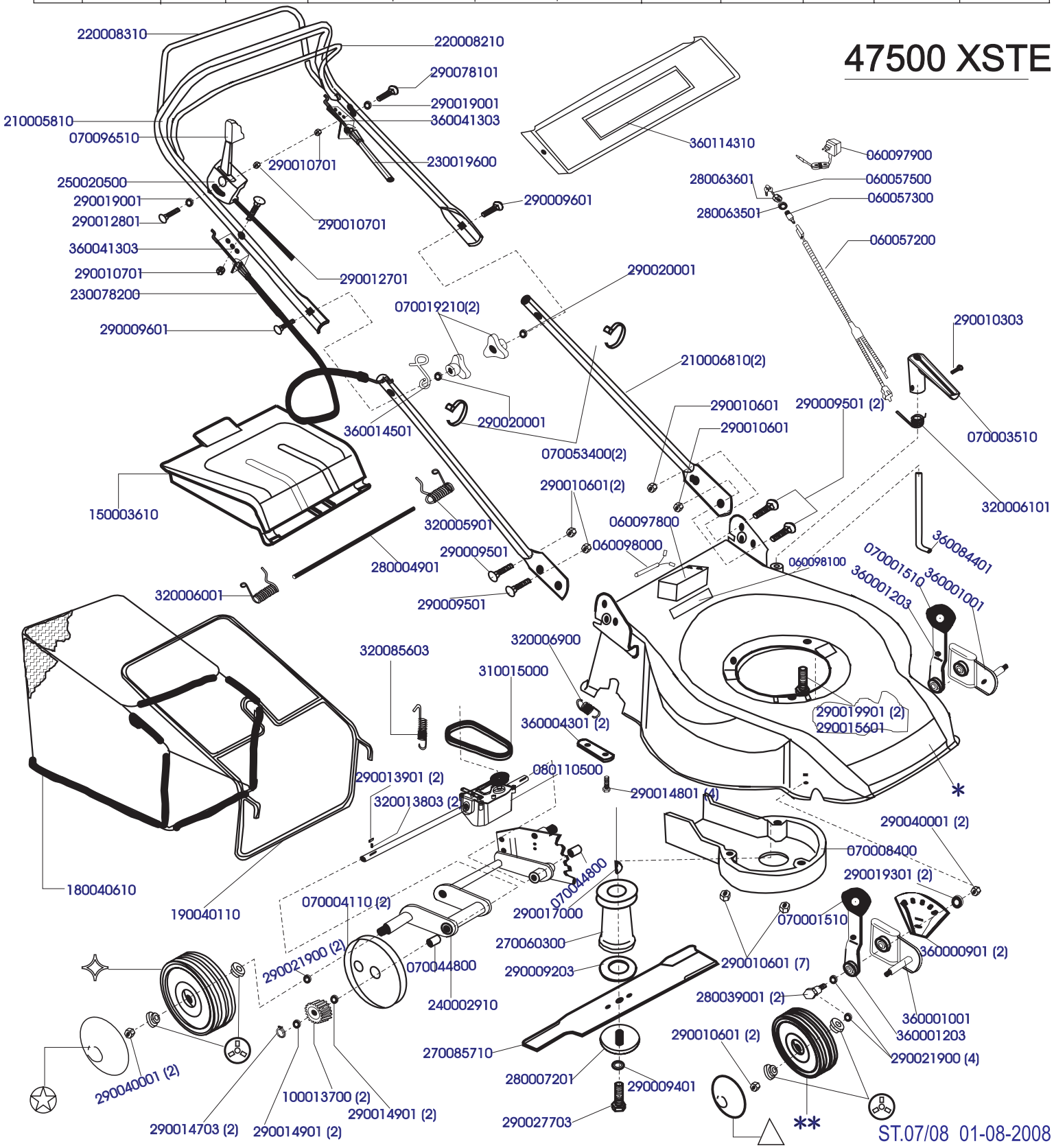
47500 XSTE