COD.	MOD.	*	**	✧	△	☆	✿					
S05003	4750 HGS	110081222	200092200(2)	200101100(2)	200070915(2)	200090015(2)	090054700(8)					
S05004	4750 HGS	110081222	200092200(2)	200101100(2)	200070915(2)	200090015(2)	090054700(8)					

4750 HGS
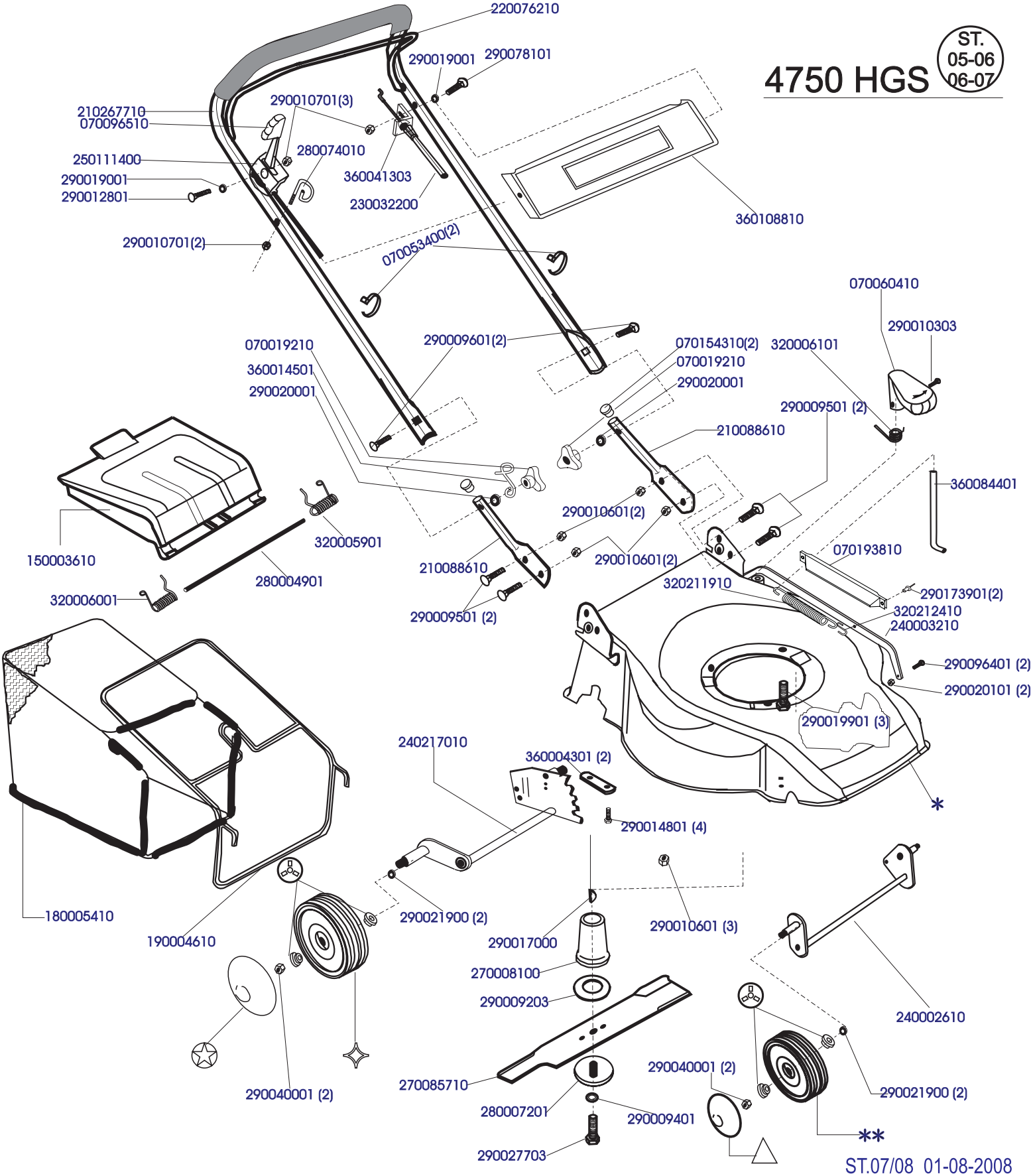
ST. 05-06 06-07