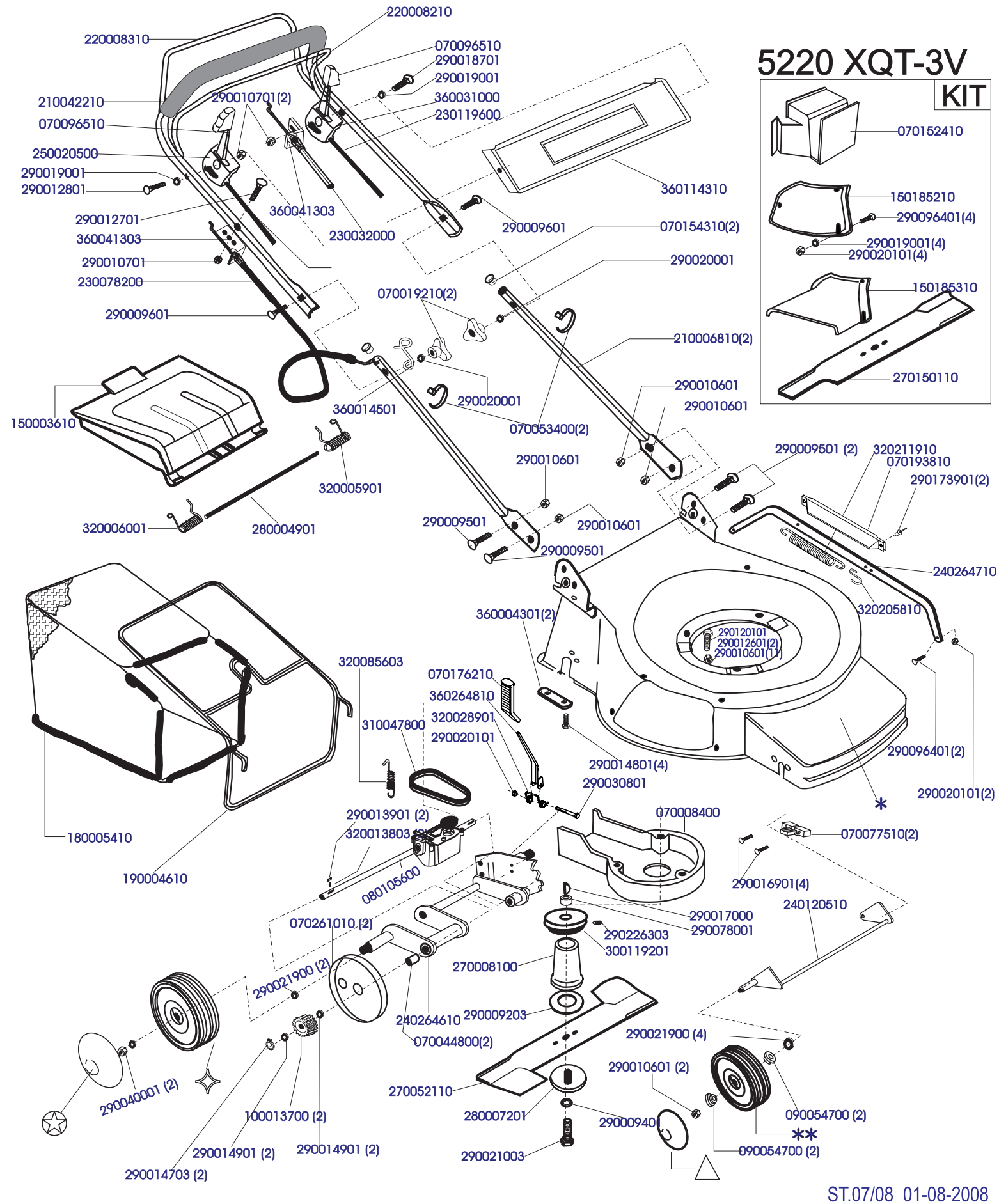| COD. | MOD. | * | ** | ✧ | ✪ | △ | | | | | | |
|---|---|---|---|---|---|---|---|---|---|---|---|---|
| S03161 | 5220 XQT | 120264421 | 200244200(2) | 200260300(2) | 200260515(2) | 200260615(2) | | | | | | |
| S03163 | 5220 XQT | 120264430 | 200244200(2) | 200260300(2) | 200260515(2) | 200260615(2) | | | | | | |
| | | | | | | | | | | | | |
| | | | | | | | | | | | | |
| | | | | | | | | | | | | |
| | | | | | | | | | | | | |
| | | | | | | | | | | | | |