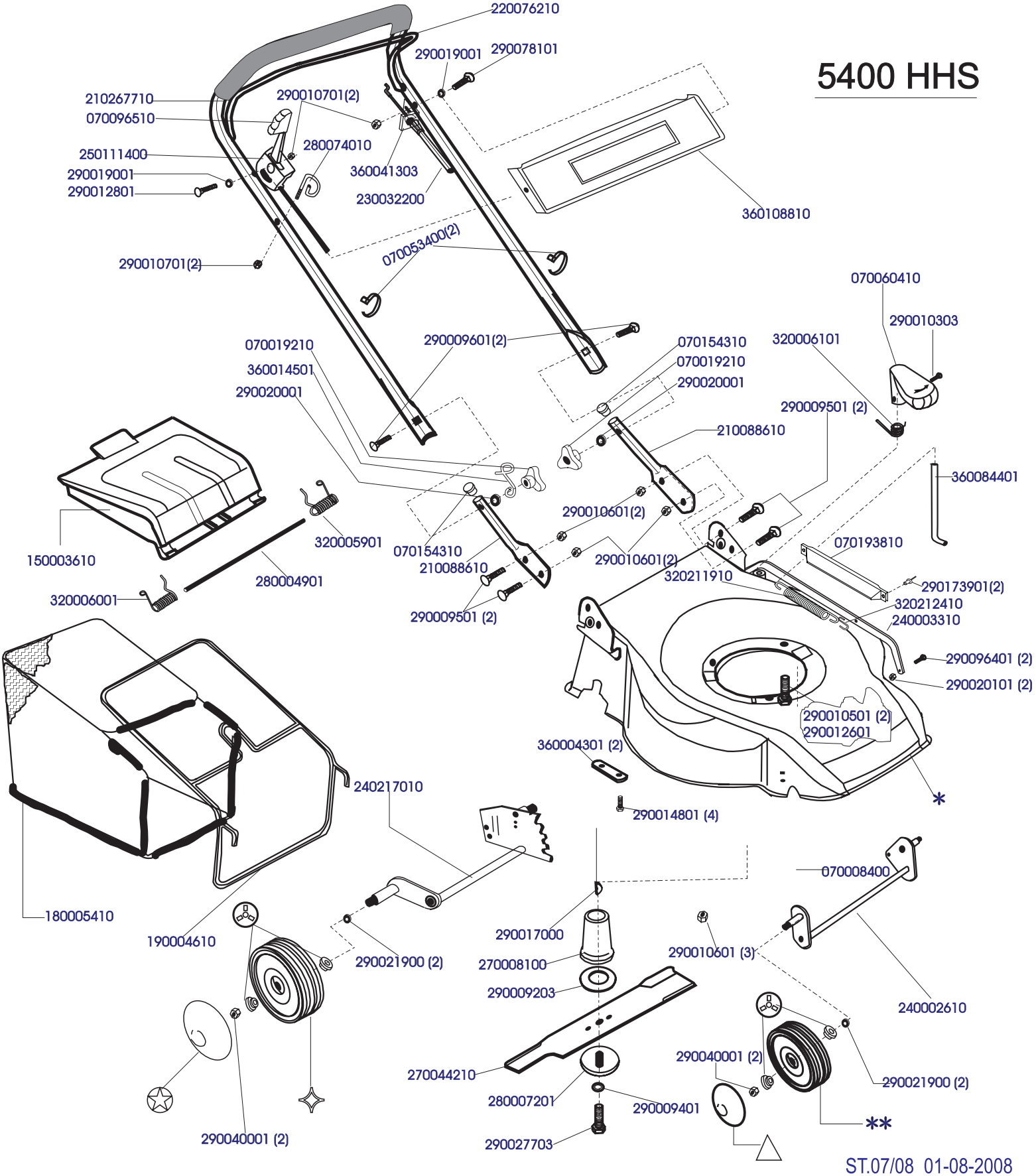COD.	MOD.	*	**	✧	△	☆	✿					
S05101	5400 HHS	110000714	200092200(2)	200101100(2)	200070915(2)	200090015(2)	090054700(8)					
S05102	5400 HHS	110000722	200092200(2)	200101100(2)	200070915(2)	200090015(2)	090054700(8)