COD.	MOD.	*	**	✧	✪	△	⊛	☒	□			
S03102	5420 GLT	110050414	200092100(2)	200013600(2)	200090015(2)	200070915(2)	090054700(4)	180005410	190004610			
S03106	5700 A50S	110050414	200092200(2)	200013600(2)	200090015(2)	200070915(2)	090054700(8)	180040610	190040110			
S03107	5420 GLT	110050416	200092100(2)	200013600(2)	200090015(2)	200070915(2)	090054700(4)	180040610	190040110			
S03108	5420 GLT	110050416	200092100(2)	200013600(2)	200090015(2)	200070915(2)	090054700(4)	180040610	190040110			
S03109	5700 A50S	110050414	200092200(2)	200013600(2)	200090015(2)	200070915(2)	090054700(8)	180040610	190040110			
S03111	5420 GLT	110050414	200092100(2)	200013600(2)	200090015(2)	200070915(2)	090054700(4)	180005410	190004610			
S03112	5420 GLT	110050414	200092100(2)	200013600(2)	200090015(2)	200070915(2)	090054700(4)	180040610	190040110			
S03113	5420 GLT	110050421	200092100(2)	200013600(2)	200090015(2)	200070915(2)	090054700(4)	180005410	190004610			
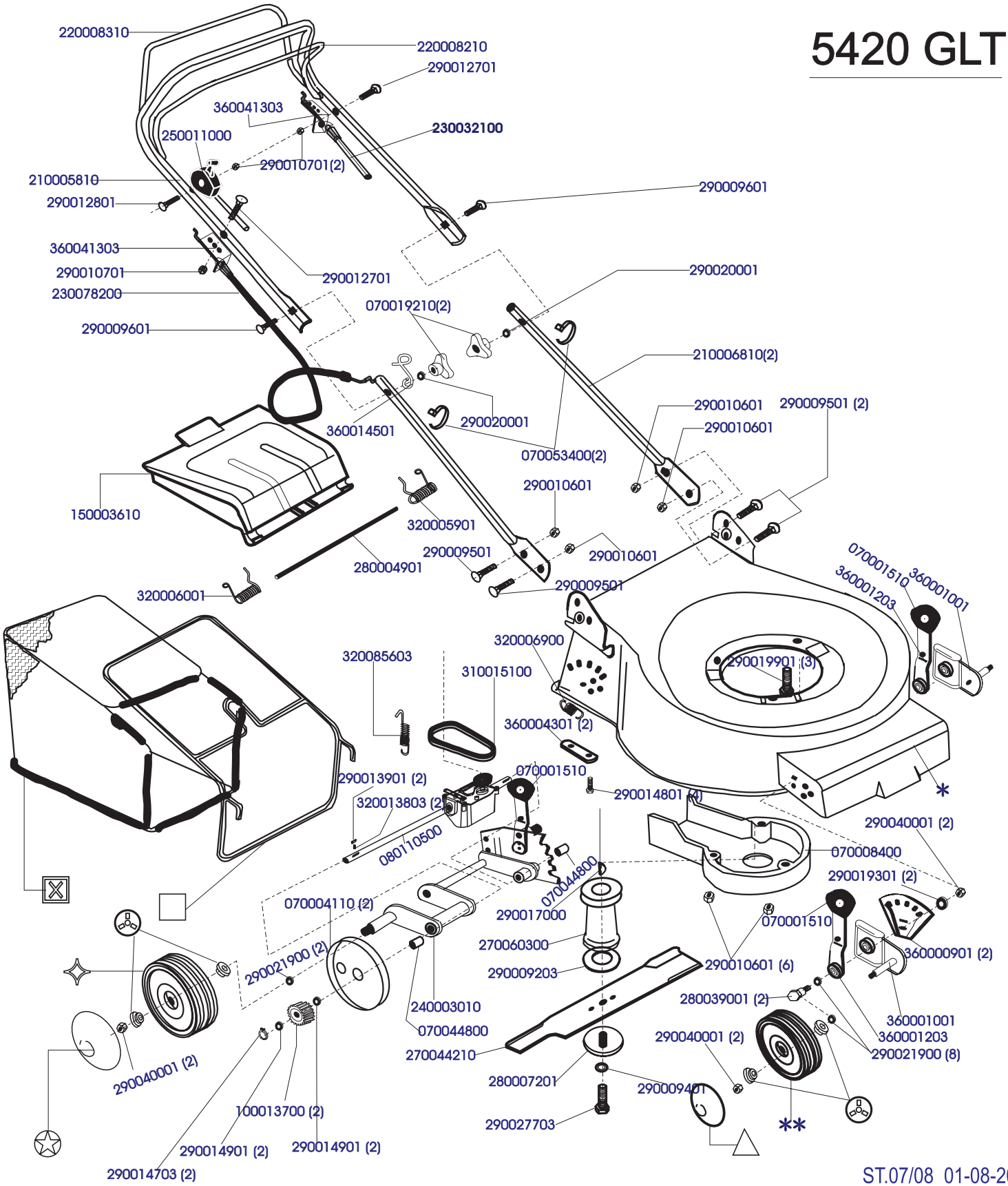
5420 GLT