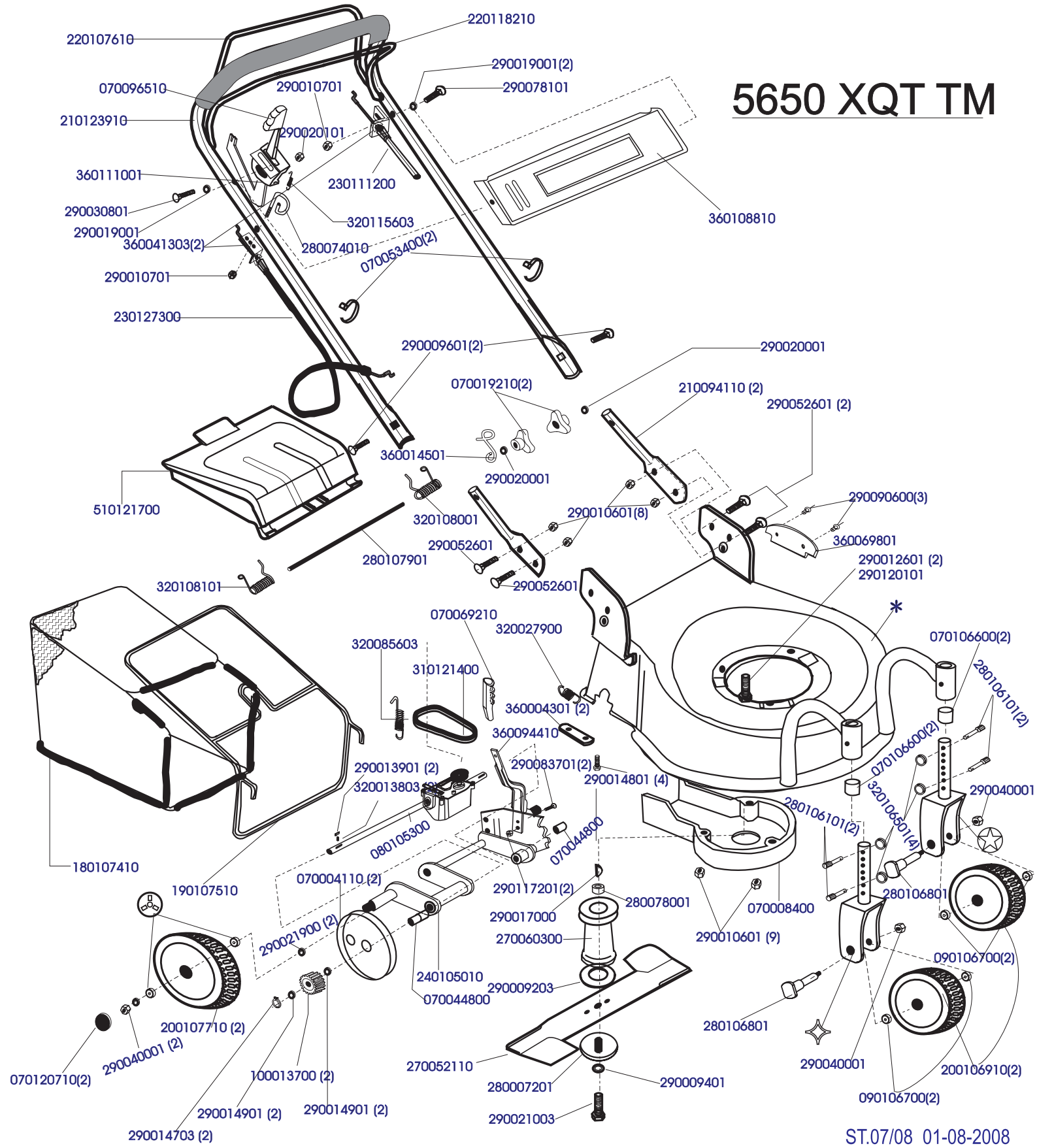COD.	MOD.	*										
S04616	5650 XQT	110107010	090106700(4)	360118410	360106410